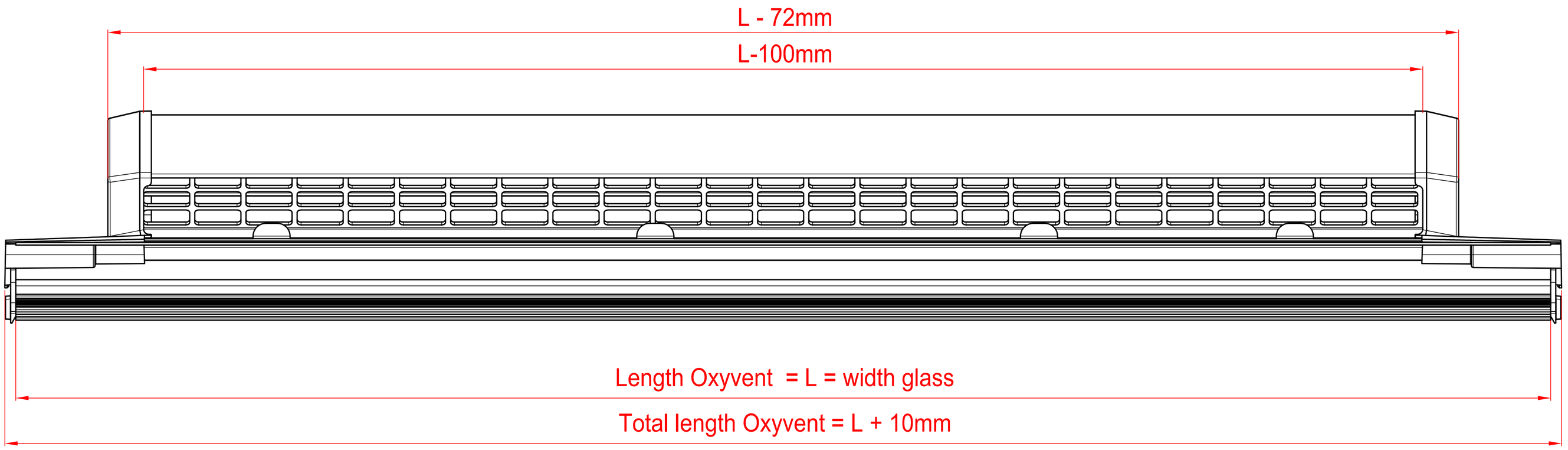

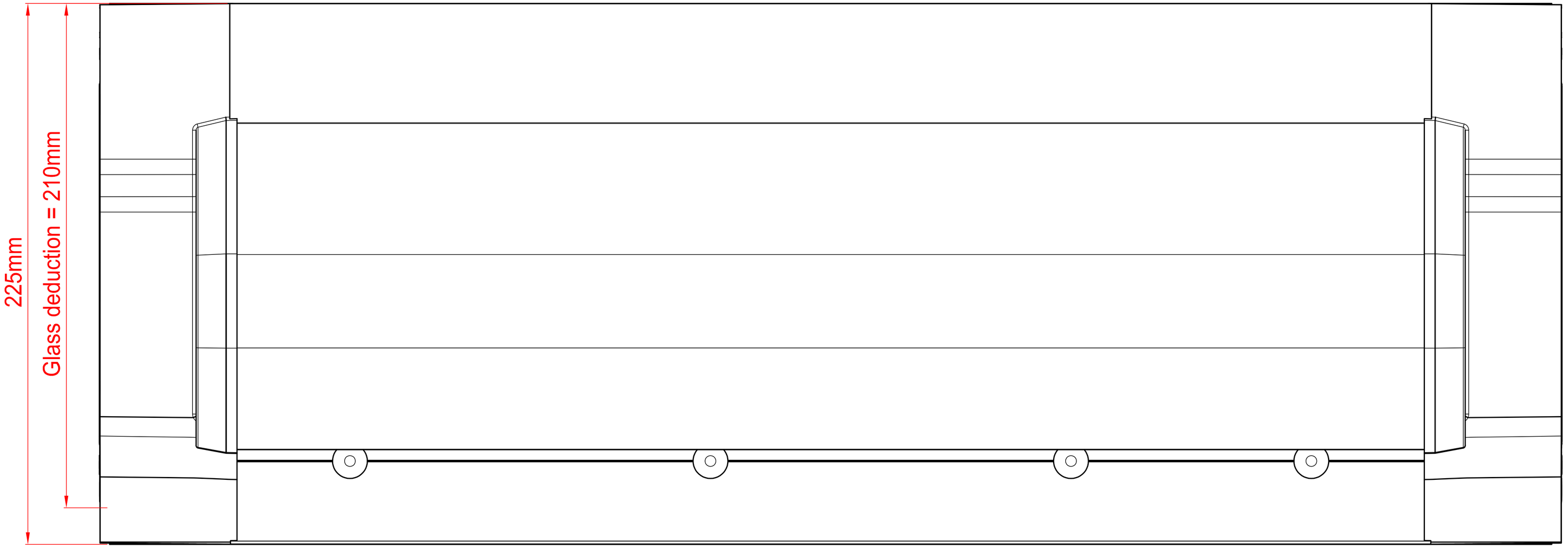

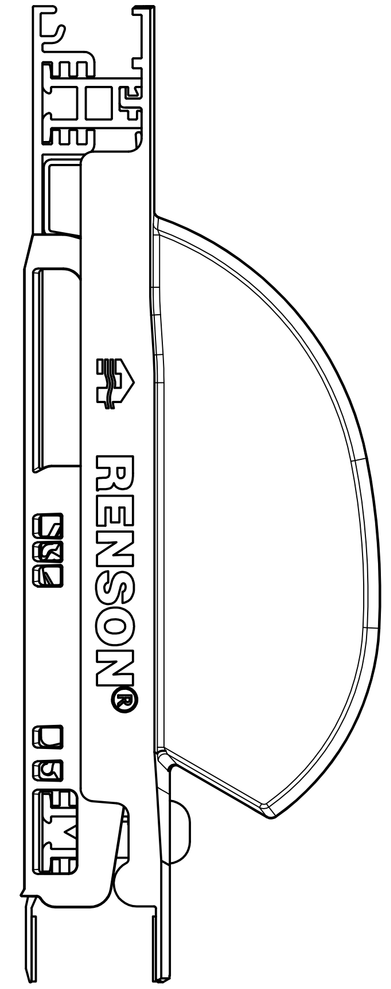

RENSON Creating healthy spaces 12 2 Vijverdam - Maalbeekstraat 10 8790 Waregem - Belgium Tel: 056/62.71.11 - Fax: 056/60.28.51	Oxyvent Dimensions - lengths S:\Ontwerp\Produktontwikkeling\verluchtingen\Oxyvent\01 x samenstelling\Vereenvoudigde technische tekeningen\Technische tekening\Oxyvent dimensions - eenvoudig.dwg	DATE SCALE	24/03/2014 1:1	REV. V01 IN Slonc
		SIZE A1	SHEET 1/1	

THIS DRAWING REMAINS PROPERTY OF NV RENSON® VENTILATION SA AND DUPLICATION OF THIS DRAWING IN WHOLE OR ANY PART IS STRICTLY FORBIDDEN WITHOUT PRIOR WRITTEN PERMISSION FROM NV RENSON® VENTILATION SA